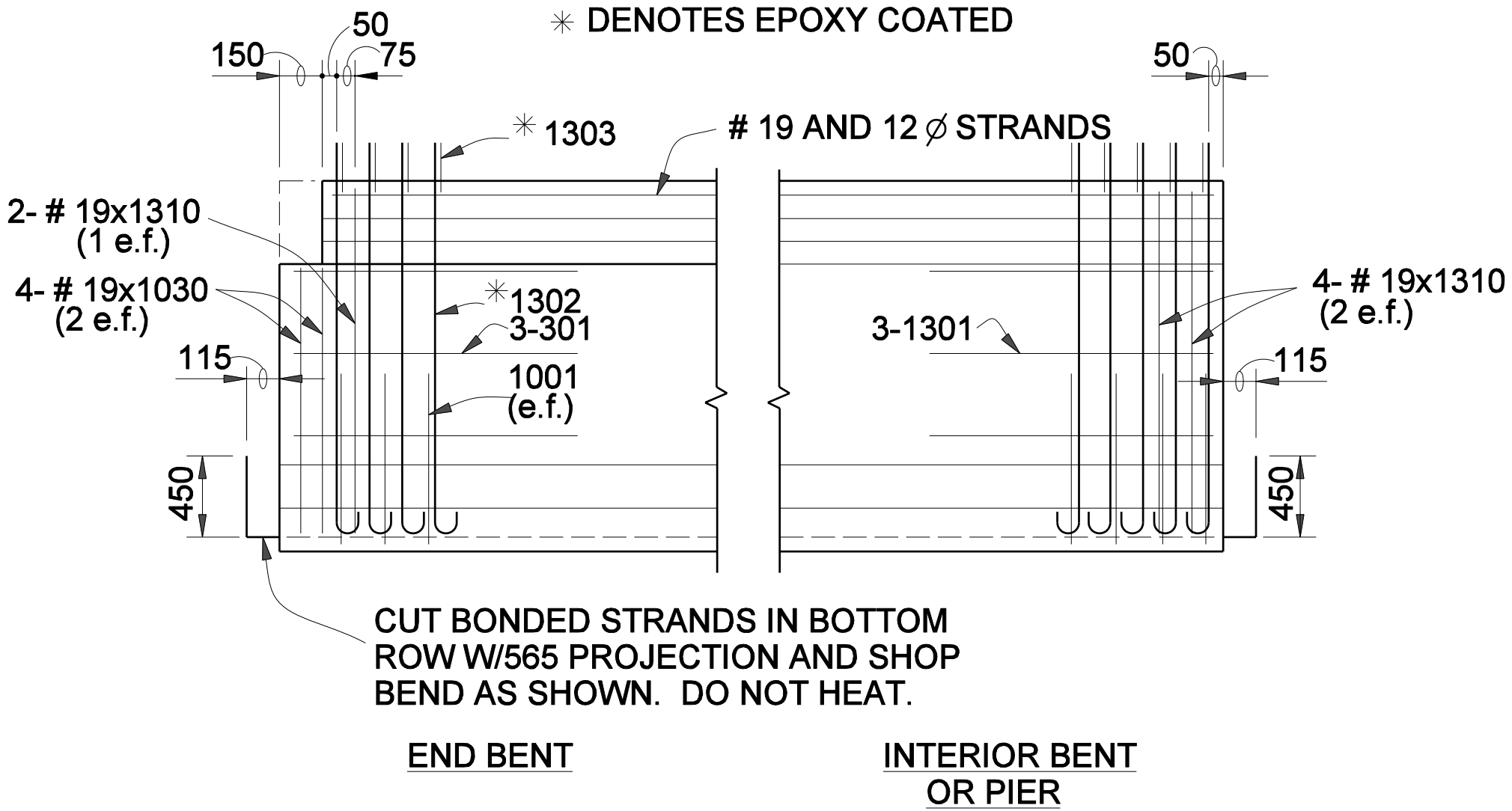

BULB - TEE BEAM (1372 DEEP)
ELEVATIONS
SHOWING END REINFORCING
Figure 63-14Y